ARISTON

SPARE PARTS EXPLODED VIEW
STORAGE ELECTRIC WATER HEATERS

Model

ABS PLT V SLIM

R8216227-02 - 10/01/2014

EN	FR	IT	ES	DE

ABS PLT V SLIM

Storage Electric Water Heaters

Col	Reference	Model type	Begin	End
1	3700153	ABS PLT 30 V SLIM	07-2008	01-2010
2	3700114	ABS PLT 50 V SLIM	02-2008	01-2010
3	3700115	ABS PLT 65 V SLIM	02-2008	01-2010
4	3700151	ABS PLT 80 V SLIM	07-2008	01-2010

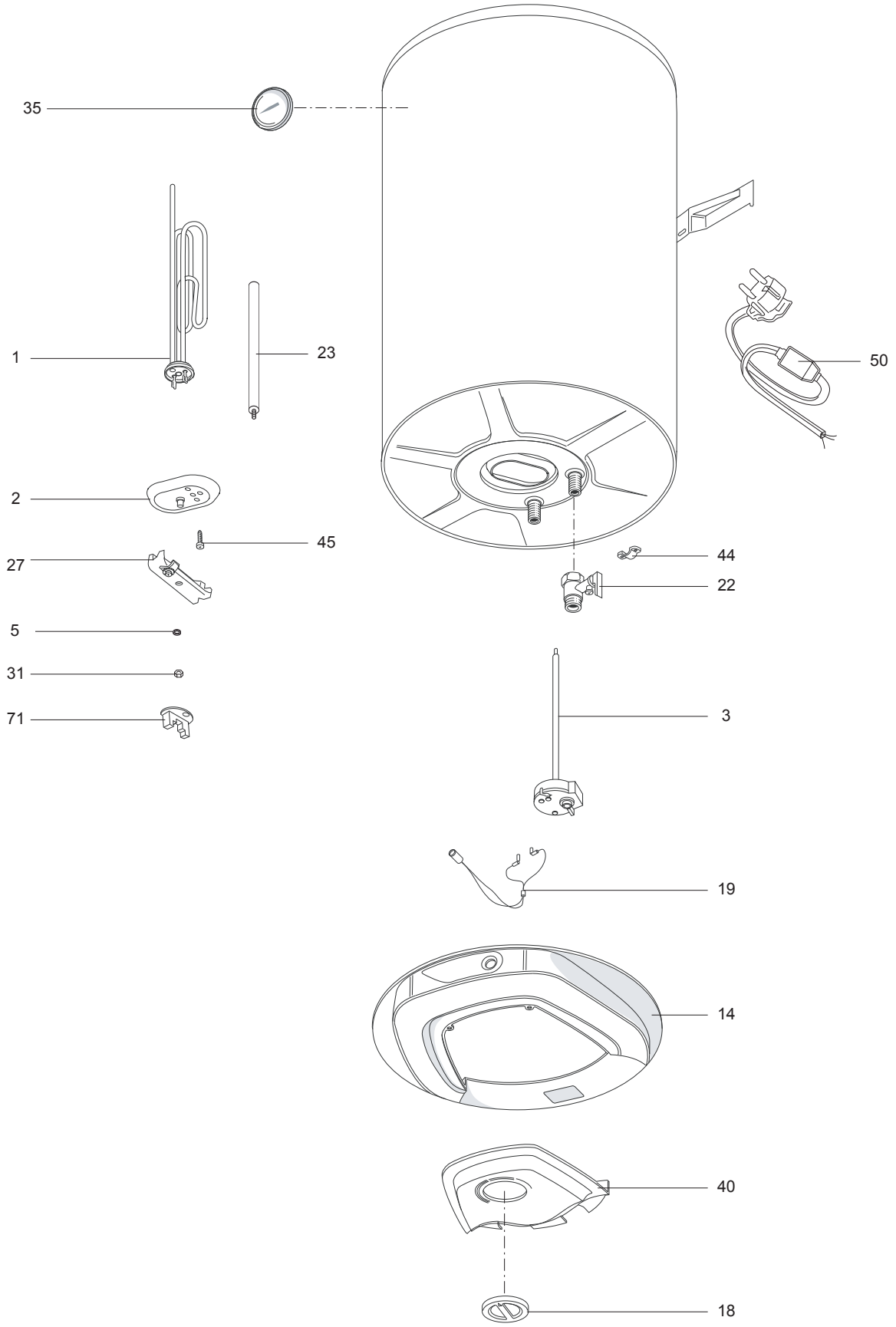
35
1
23
50
2
45
27
44
22
5
31
71
3
19
14
40
18

	Description	Manf. Pt. N	Type	30	50	65	80	5	6	7	8	9	10	11	12	13	14	15	16	17	18	From	to
				1	2	3	4																
0001	НАГРЕВАТЕЛЬНЫЙ ЭЛЕМЕНТ 1500W 230V	816616		●	●	●	●																
0002	ФЛАНЕЦ С ПРОКЛАДКОЙ	65103691		●	●	●	●																
0003	ТЕРМОСТАТ	65104527		●	●	●	●																
0005	ШАЙБА M8	65107147		●	●	●	●																
0014	КРЫШКА ПЛАСТИКОВАЯ БОЛЬШАЯ	65180030		●	●	●	●																
0018	РУЧКА РЕГУЛИРОВАНИЯ	993183-RU		●	●	●	●																
0019	ИНДИКАТОРНАЯ ЛАМПА	65102599		●	●	●	●																
0022	ПРЕДОХРАНИТЕЛЬНЫЙ КЛАПАН (1/2" 7 БАР)	65109003		●	●	●	●																
0023	МАГНИЕВЫЙ АНОД D:25,5 L:230 M5-M8	993014-01		●	●	●	●																
0027	СКОБА ФЛАНЦА	993011		●	●	●	●																
0031	ГАЙКА M8	570127		●	●	●	●																
0035	ТЕРМОМЕТР	65150895		●	●	●	●																
0040	КРЫШКА ПЛАСТИКОВАЯ	65180031		●	●	●	●																
0044	ЗАЖИМ ДЛЯ КАБЕЛЯ	573266		●	●	●	●																
0045	ВИНТ M6X12	993000		●	●	●	●																
0050	КАБЕЛЬ ПИТАНИЯ С УЗО	65150868		●	●	●	●																
0071	ИЗОЛЯТОР КЛЕММ ТЭНА (NEUTRAL)	993010		●	●	●	●																

LIST OF THE ABBREVATIONS

HW	: Hot water.
CW	: Cold water.
C	: Ceramic resistance (normal heating).
Ca	: Ceramic resistance (accelerated heating)
TP	: Immersion heater.
1F	: With fittings.
2F	: Without fittings.
3F	: With fittings and another outlet connection.
AMI	: With mixing valve.
SMI	: Without mixing valve.
PUISS	: Power of th appliance.
PN	: Appliance with normal pression.
LP	: Appliance with low pression.
PV	: Appliance with variable power.
PF	: Appliance with fixed power.

IDENTIFICATION PLATE

SERIAL NUMBER

6 Characters : 03 09 08
- Year of manufacture
- Manufacturing day
- Month of manufacture

9 Characters : M 12 10 0606
- Year of manufacture
- Month of manufacture
- Sequencial number

14 Characters : SI-V-0B0 45 07 0001
- Sequencial number
- Year of manufacture : 6 ➞ 2004, 7 ➞ 2005, 8 ➞ 2006 etc ...
- Month of manufacture : 25 ➞ January, 13 ➞ February, 32 ➞ March, 35 ➞ April, 39 ➞ May, 45 ➞ June, 43 ➞ July, 29 ➞ August, 40 ➞ September, 38 ➞ October, 51 ➞ November, 12 ➞ December
- Product model

15 Characters : 02 11 00001 007843
- Year of manufacture
- Month of manufacture
- Code appareil
- Sequencial number

21 Characters : 3200050 XX 08115 0000001
- Product reference
- Sequencial number
- Year (08) / Manufacturing day (115)

22 Characters : 3200050 XX 070115 0000001
- Product reference
- Sequencial number
- Year (07) / Month (01) / Manufacturing day (15)

The indications mentionned on the prices, commercial or technical literature and the scheme are written for your guidance and are available at a given time. The CONSTRUCTOR retains the power to modify the presentation, the form, the size, the conception or the material of the products.