ARISTON

# SPARE PARTS EXPLODED VIEW
# GAS-WALL CONDENSING BOILERS
Model
# GENUS PREMIUM - CLAS PREMIUM

R8203212-04 - 22/01/2016

| EN | FR | IT | ES | DE | NL |
|---|---|---|---|---|---|

| Col | Reference | Model type | Begin | End |
|---|---|---|---|---|
| 1 | 3665012 | GENUS PREMIUM 24 NG IT_A | 12-2006 | 05-2009 |
| 1 | 3665059 | GENUS PREMIUM 24 LPG (IT) | 03-2007 | 07-2009 |
| 1 | 3665065 | GENUS PREMIUM 24 NG PI | 03-2007 | 08-2009 |
| 1 | 3665063 | GENUS PREMIUM 24 LPG (PI) | 03-2007 | 08-2009 |
| 1 | 3665036 | GENUS PREMIUM 24 NG (EAA1) | 04-2007 | 11-2009 |
| 1 | 3665039 | GENUS PREMIUM 24 NG (EAA2) | 05-2007 | 12-2009 |
| 1 | 3300324 | GENUS PREMIUM 24 NG | 06-2009 | 05-2013 |
| 1 | 3300290 | GENUS PREMIUM SOLAR 25 N (IT-PI) | 04-2009 | 07-2013 |
| 2 | 3665013 | GENUS PREMIUM 30 NG IT_A | 12-2006 | 05-2009 |
| 2 | 3665060 | GENUS PREMIUM 30 LPG (IT) | 04-2007 | 07-2009 |
| 2 | 3665066 | GENUS PREMIUM 30 NG PI | 03-2007 | 08-2009 |
| 2 | 3665064 | GENUS PREMIUM 30 LPG (PI) | 03-2007 | 11-2007 |
| 2 | 3665037 | GENUS PREMIUM 30 NG (EAA1) | 04-2007 | 09-2007 |
| 2 | 3665040 | GENUS PREMIUM 30 NG (EAA2) | 05-2007 | 12-2009 |
| 2 | 3300325 | GENUS PREMIUM 30 NG | 06-2009 | 05-2013 |
| 3 | 3665014 | GENUS PREMIUM 35 NG IT_A | 12-2006 | 05-2009 |
| 3 | 3665069 | GENUS PREMIUM 35 LPG (IT) | 04-2007 | 07-2009 |
| 3 | 3665067 | GENUS PREMIUM 35 NG PI | 03-2007 | 08-2009 |
| 3 | 3665068 | GENUS PREMIUM 35 LPG (PI) | 03-2007 | 06-2007 |
| 3 | 3665038 | GENUS PREMIUM 35 NG (EAA1) | 04-2007 | 12-2009 |
| 3 | 3665041 | GENUS PREMIUM 35 NG (EAA2) | 05-2007 | 12-2009 |
| 3 | 3300326 | GENUS PREMIUM 35 NG | 06-2009 | 05-2013 |
| 4 | 3665095 | GENUS PREMIUM SYSTEM 12 MET IT | 06-2008 | 05-2009 |
| 4 | 3665115 | GENUS PREMIUM SYSTEM 12 NG EAA1 | 01-2009 | 11-2009 |
| 4 | 3300327 | GENUS PREMIUM SYSTEM 12 NG | 06-2009 | 05-2013 |
| 4 | 3300291 | GENUS PREMIUM SYSTEM SOLAR 12 N (IT-PI) | 05-2009 | 07-2013 |
| 5 | 3665096 | GENUS PREMIUM SYSTEM 18 MET IT | 06-2008 | 05-2009 |
| 5 | 3665116 | GENUS PREMIUM SYSTEM 18 NG EAA1 | 01-2009 | 11-2009 |
| 5 | 3300328 | GENUS PREMIUM SYSTEM 18 NG | 06-2009 | 05-2013 |
| 6 | 3665042 | GENUS PREMIUM SYSTEM 24 NG (IT) | 05-2007 | 05-2009 |
| 6 | 3665061 | GENUS PREMIUM SYSTEM 24 LPG (IT) | 04-2007 | 07-2009 |
| 6 | 3665044 | GENUS PREMIUM SYSTEM 24 NG (EAA1) | 06-2007 | 12-2009 |
| 6 | 3665046 | GENUS PREMIUM SYSTEM 24 NG (EAA2) | 06-2007 | 07-2007 |
| 6 | 3300329 | GENUS PREMIUM SYSTEM 24 NG | 06-2009 | 05-2013 |
| 7 | 3665043 | GENUS PREMIUM SYSTEM 30 NG (IT) | 04-2007 | 05-2009 |
| 7 | 3665090 | GENUS PREMIUM SYSTEM 30 NG PI | 06-2008 | 08-2009 |
| 7 | 3665062 | GENUS PREMIUM SYSTEM 30 LPG (IT) | 04-2007 | 09-2007 |
| 7 | 3665045 | GENUS PREMIUM SYSTEM 30 NG (EAA1) | 05-2007 | 10-2007 |
| 7 | 3665047 | GENUS PREMIUM SYSTEM 30 NG (EAA2) | 05-2007 | 09-2011 |
| 7 | 3300333 | GENUS PREMIUM SYSTEM 30 NG | 06-2009 | 05-2013 |
| 8 | 3300437 | GENUS PREMIUM SYSTEM 35 NG | 07-2011 | 05-2013 |
| 9 | 3665048 | CLAS PREMIUM 24 NG (IT) | 04-2007 | 06-2009 |
| 9 | 3665091 | CLAS PREMIUM 24 NG (PI) | 03-2008 | 10-2009 |
| 9 | 3665049 | CLAS PREMIUM 24 LPG (IT) | 07-2007 | 07-2009 |
| 9 | 3665076 | CLAS PREMIUM 24 NG (EAA1) | 10-2007 | 12-2009 |
| 9 | 3665078 | CLAS PREMIUM 24 NG (EAA2) | 11-2007 | 12-2009 |
| 9 | 3300330 | CLAS PREMIUM 24 NG | 06-2009 | 05-2013 |
| 10 | 3665050 | CLAS PREMIUM 30 NG (IT) | 04-2007 | 06-2009 |
| 10 | 3665051 | CLAS PREMIUM 30 LPG (IT) | 09-2007 | 07-2009 |
| 10 | 3665077 | CLAS PREMIUM 30 NG (EAA1) | 11-2007 | 11-2009 |
| 10 | 3665079 | CLAS PREMIUM 30 NG (EAA1) | 11-2007 | 11-2007 |
| 10 | 3300332 | CLAS PREMIUM 30 NG | 06-2009 | 05-2013 |
| 11 | 3665117 | CLAS PREMIUM SYSTEM 24 KW EAA1 | 01-2009 | 09-2009 |

**100**
**200**

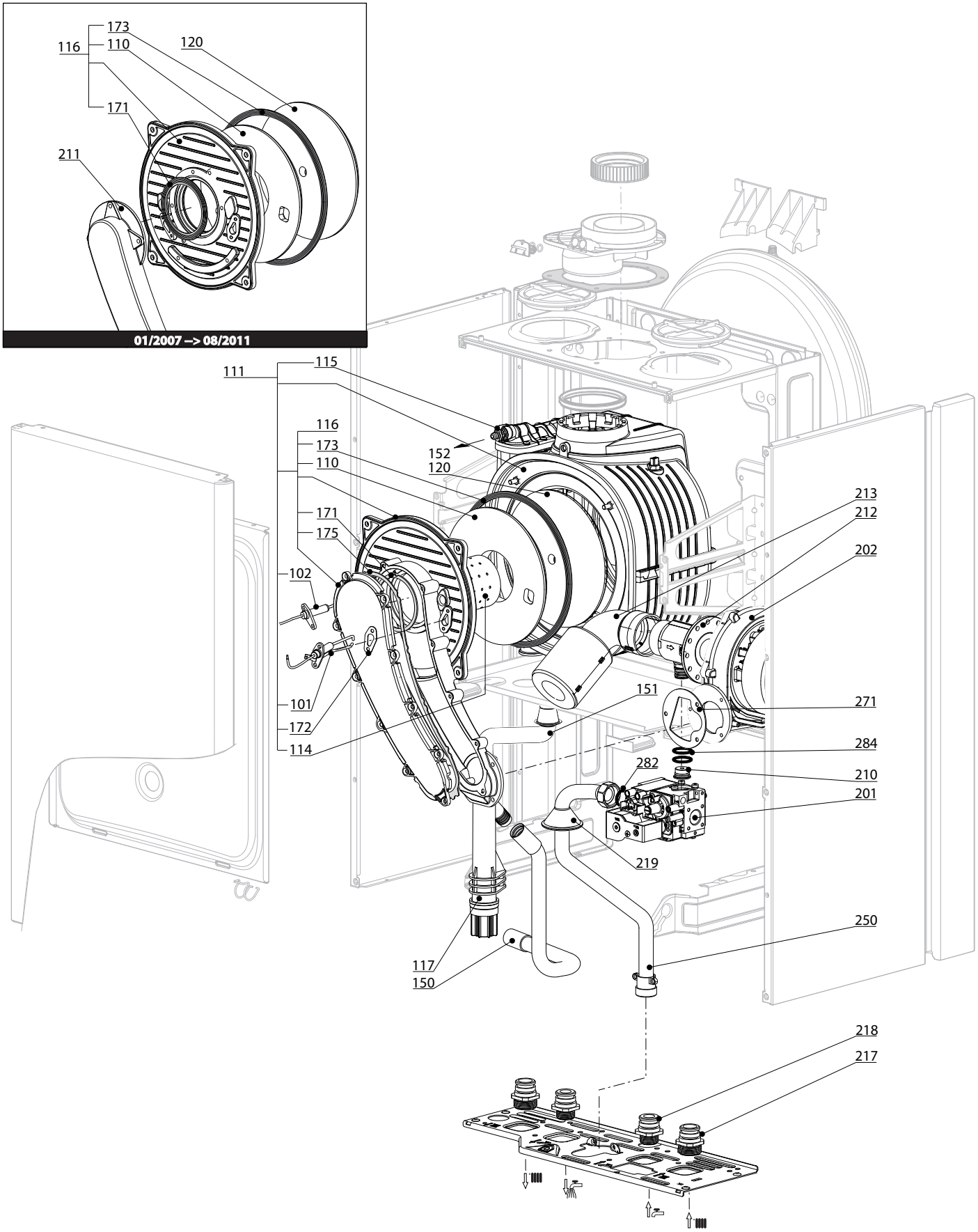


R8208460

| | Description | Manf. Pt. N | Type | 1 GENUS PREMIUM 24 | 2 GENUS PREMIUM 30 | 3 GENUS PREMIUM 35 | 4 GENUS PREMIUM SYS.12 | 5 GENUS PREMIUM SYS. 18 | 6 GENUS PREMIUM SYS. 24 | 7 GENUS PREMIUM SYS. 30 | 8 GENUS PREMIUM SYS. 35 | 9 CLAS PREMIUM 24 | 10 CLAS PREMIUM 30 | 11 CLAS PREMIUM SYS. 24 | 12 | 13 | 14 | 15 | 16 | 17 | 18 | From | to |
|---|---|---|---|---|---|---|---|---|---|---|---|---|---|---|---|---|---|---|---|---|---|---|---|
| 0100 | ГОРЕЛКА | | | | | | | | | | | | | | | | | | | | | | |
| 0101 | ЭЛЕКТРОД РОЗЖИГА | 60000868-01 | | ● | ● | ● | ● | ● | ● | ● | ● | ● | ● | ● | | | | | | | | | |
| 0102 | ЭЛЕКТРОД ИОНИЗАЦИИ | 60000867-01 | | ● | ● | ● | ● | ● | ● | ● | ● | ● | ● | ● | | | | | | | | | |
| 0110 | ТЕПЛОИЗОЛЯЦИЯ (ПЕРЕДНЯЯ) | 60000297 | | ● | ● | ● | ● | ● | ● | ● | ● | ● | ● | ● | | | | | | | | | |
| 0111 | ОСНОВНОЙ ТЕПЛООБМЕННИК (12KW) | 60001128 | | | | | ● | | | | | | | | | | | | | | | | |
| | ОСНОВНОЙ ТЕПЛООБМЕННИК (18/24KW) | 65111608 | | ● | | | | ● | ● | | | ● | | ● | | | | | | | | 09/11 | |
| | ОСНОВНОЙ ТЕПЛООБМЕННИК (18KW) | 60000869 | | | | | | ● | | | | | | | | | | | | | | | 08/11 |
| | ОСНОВНОЙ ТЕПЛООБМЕННИК (24KW) | 60000292 | | ● | | | | | ● | | | ● | | ● | | | | | | | | | 08/11 |
| | ОСНОВНОЙ ТЕПЛООБМЕННИК (30KW) | 60000293 | | | ● | | | | | ● | | | ● | | | | | | | | | | 08/11 |
| | ОСНОВНОЙ ТЕПЛООБМЕННИК (30KW) | 65111606 | | | ● | | | | | ● | | | ● | | | | | | | | | 09/11 | |
| | ОСНОВНОЙ ТЕПЛООБМЕННИК (35KW) | 60000294 | | | | ● | | | | | | | | | | | | | | | | | 08/11 |
| | ОСНОВНОЙ ТЕПЛООБМЕННИК (35KW) | 65111607 | | | | ● | | | | | ● | | | | | | | | | | | 09/11 | |
| 0114 | ГОРЕЛКА 12-18KW | 60000864-01 | | | | | | ● | | | | | | | | | | | | | | | 08/11 |
| | ГОРЕЛКА 12-18KW | 60000864-01 | | | | | ● | | | | | | | | | | | | | | | | |
| | ГОРЕЛКА 18/24KW | 60000288-01 | | ● | | | | | ● | | | ● | | ● | | | | | | | | | |
| | ГОРЕЛКА 18/24KW | 60000288-01 | | | | | | ● | | | | | | | | | | | | | | 09/11 | |
| | ГОРЕЛКА 30KW | 60000289-01 | | | ● | | | | | ● | | | ● | | | | | | | | | | |
| | ГОРЕЛКА 35KW | 60000287-01 | | | | ● | | | | | ● | | | | | | | | | | | | |
| 0115 | ВОЗДУХООТВОДЧИК | 60000994 | | ● | ● | ● | ● | ● | ● | ● | ● | ● | ● | ● | | | | | | | | | |
| 0116 | КРЫШКА КАМЕРЫ СГОРАНИЯ | 60000318 | | ● | ● | ● | | ● | ● | ● | | ● | ● | ● | | | | | | | | | 08/11 |
| | КРЫШКА КАМЕРЫ СГОРАНИЯ | 60000318 | | | | | ● | | | | | | | | | | | | | | | | |
| | КРЫШКА КАМЕРЫ СГОРАНИЯ | 65111604 | | ● | ● | ● | | ● | ● | ● | ● | ● | ● | ● | | | | | | | | 09/11 | |
| 0117 | СИФОН | 60000987 | | ● | ● | ● | ● | ● | ● | ● | ● | ● | ● | ● | | | | | | | | | |
| 0120 | ТЕПЛОИЗОЛЯЦИЯ (ЗАДНЯЯ) | 65105904 | | ● | ● | ● | ● | ● | ● | ● | ● | ● | ● | ● | | | | | | | | | |
| 0150 | ТРУБКА PVC D:19 L:500 | 60000976 | | ● | ● | ● | ● | ● | ● | ● | ● | ● | ● | ● | | | | | | | | | |
| 0151 | ТРУБКА ГИБКАЯ | 60000532 | | ● | ● | ● | ● | ● | ● | ● | ● | ● | ● | ● | | | | | | | | | |
| 0152 | ТРУБКА СИЛИКОНОВАЯ D:8x1 L:0.15M | 60001013 | | ● | ● | ● | ● | ● | ● | ● | ● | ● | ● | ● | | | | | | | | | |
| 0171 | ПРОКЛАДКА D:80.6-1.8 | 60001610 | | ● | ● | ● | | ● | ● | ● | ● | ● | ● | ● | | | | | | | | 09/11 | |
| | ПРОКЛАДКА D:85-66.5-2.5 | 61314753 | | ● | ● | ● | | ● | ● | ● | | ● | ● | ● | | | | | | | | | 08/11 |
| | ПРОКЛАДКА D:85-66.5-2.5 | 61314753 | | | | | ● | | | | | | | | | | | | | | | | |
| 0172 | ПРОКЛАДКА ЭЛЕКТРОДА РОЗЖИГА | 60000286-01 | | ● | ● | ● | ● | ● | ● | ● | ● | ● | ● | ● | | | | | | | | | |
| 0173 | ПРОКЛАДКА КРЫШКИ КАМЕРЫ СГОРАНИЯ | 60000296 | | ● | ● | ● | ● | ● | ● | ● | | ● | ● | ● | | | | | | | | | 01/07 |
| | ПРОКЛАДКА КРЫШКИ КАМЕРЫ СГОРАНИЯ | 60000623 | | ● | ● | ● | ● | ● | ● | ● | ● | ● | ● | ● | | | | | | | | 02/07 | |
| 0175 | ПРОКЛАДКА | 60001609 | | ● | ● | ● | | ● | ● | ● | ● | ● | ● | ● | | | | | | | | 09/11 | |
| 0213 | ШУМОГЛУШИТЕЛЬ | 65111609 | | | | | | | | | ● | | | | | | | | | | | 09/11 | |
| | | | | | | | | | | | | | | | | | | | | | | | |
| 0200 | ГАЗОВАЯ ЧАСТЬ | | | | | | | | | | | | | | | | | | | | | | |
| 0201 | ГАЗОВЫЙ КЛАПАН | 60000537 | | ● | ● | ● | ● | ● | ● | ● | ● | ● | ● | ● | | | | | | | | | |
| 0202 | ВЕНТИЛЯТОР | 60000622 | | ● | ● | ● | ● | ● | ● | ● | ● | ● | ● | ● | | | | | | | | | |
| 0210 | ДИАФРАГМА ГАЗОВАЯ D:3.10 | 60001349 | GPL | | | | ● | | | | | | | | | | | | | | | | |
| | ДИАФРАГМА ГАЗОВАЯ D:3.80 | 60000632 | GPL | ● | | | | ● | ● | | | ● | | ● | | | | | | | | | |
| | ДИАФРАГМА ГАЗОВАЯ D:4.50 | 60000633 | GPL | | ● | | | | | ● | ● | | ● | | | | | | | | | | |
| | ДИАФРАГМА ГАЗОВАЯ D:4.50 | 60000633 | MET | | | | ● | | | | | | | | | | | | | | | | |
| | ДИАФРАГМА ГАЗОВАЯ D:5.20 | 60000733 | GPL | | | ● | | | | | | | | | | | | | | | | | |
| 0211 | КОЛЛЕКТОР ГАЗО-ВОЗДУШНОЙ СМЕСИ | 60000290 | | ● | ● | ● | ● | ● | ● | ● | ● | ● | ● | ● | | | | | | | | | |
| 0212 | ТРУБКА ВЕНТУРИ D:14 MM | 65105894 | | | | | ● | | | | | | | | | | | | | | | | |
| | ТРУБКА ВЕНТУРИ D:14 MM | 65105894 | | | | | | ● | | | | | | | | | | | | | | 09/11 | |
| | ТРУБКА ВЕНТУРИ D:17 MM | 60000536 | | | | | | ● | | | | | | | | | | | | | | | 08/11 |
| | ТРУБКА ВЕНТУРИ D:17 MM | 60000536 | | ● | | | | | ● | | | ● | | ● | | | | | | | | | |
| | ТРУБКА ВЕНТУРИ D:21 MM | 60000587 | | | ● | | | | | ● | ● | | ● | | | | | | | | | | |
| | ТРУБКА ВЕНТУРИ D:21 MM | 60000587 | | | | ● | | | | | | | | | | | | | | | | 09/11 | |
| | ТРУБКА ВЕНТУРИ D:25 MM | 60000621 | | | | ● | | | | | | | | | | | | | | | | | 08/11 |
| 0213 | ШУМОГЛУШИТЕЛЬ | 60000539 | | ● | ● | ● | | ● | ● | ● | | ● | ● | ● | | | | | | | | | 08/11 |
| | ШУМОГЛУШИТЕЛЬ | 60000539 | | | | | ● | | | | | | | | | | | | | | | | |
| | ШУМОГЛУШИТЕЛЬ | 65111609 | | ● | ● | ● | | ● | ● | ● | | ● | ● | ● | | | | | | | | 09/11 | |
| 0217 | СОЕДИНЕНИЕ (3/4") | 65104326 | | ● | ● | ● | ● | ● | ● | ● | ● | ● | ● | ● | | | | | | | | | |
| 0218 | СОЕДИНЕНИЕ (1/2") | 65104327 | | ● | ● | ● | ● | ● | ● | ● | ● | ● | ● | ● | | | | | | | | | |
| 0219 | УПЛОТНЕНИЕ | 61010109 | | ● | ● | ● | ● | ● | ● | ● | ● | ● | ● | ● | | | | | | | | | |
| 0250 | ТРУБКА ПОДАЧИ ГАЗА | 60000538 | | ● | | | ● | ● | ● | | | ● | | ● | | | | | | | | | |
| | ТРУБКА ПОДАЧИ ГАЗА | 60000588 | | | ● | | | | | ● | | | ● | | | | | | | | | | |
| | ТРУБКА ПОДАЧИ ГАЗА | 60000589 | | | | ● | | | | | ● | | | | | | | | | | | | |
| 0271 | ПРОКЛАДКА | 61306072 | | ● | ● | ● | ● | ● | ● | ● | ● | ● | ● | ● | | | | | | | | | |
| 0282 | ПЛОСКАЯ ПРОКЛАДКА D:24-18.2-1.5 | 60022835-01 | | ● | ● | ● | ● | ● | ● | ● | ● | ● | ● | ● | | | | | | | | | |
| 0284 | О-КОЛЬЦО 17.76X1.78 | 61308092 | | ● | ● | ● | ● | ● | ● | ● | ● | ● | ● | ● | | | | | | | | | |

**300**
**400**

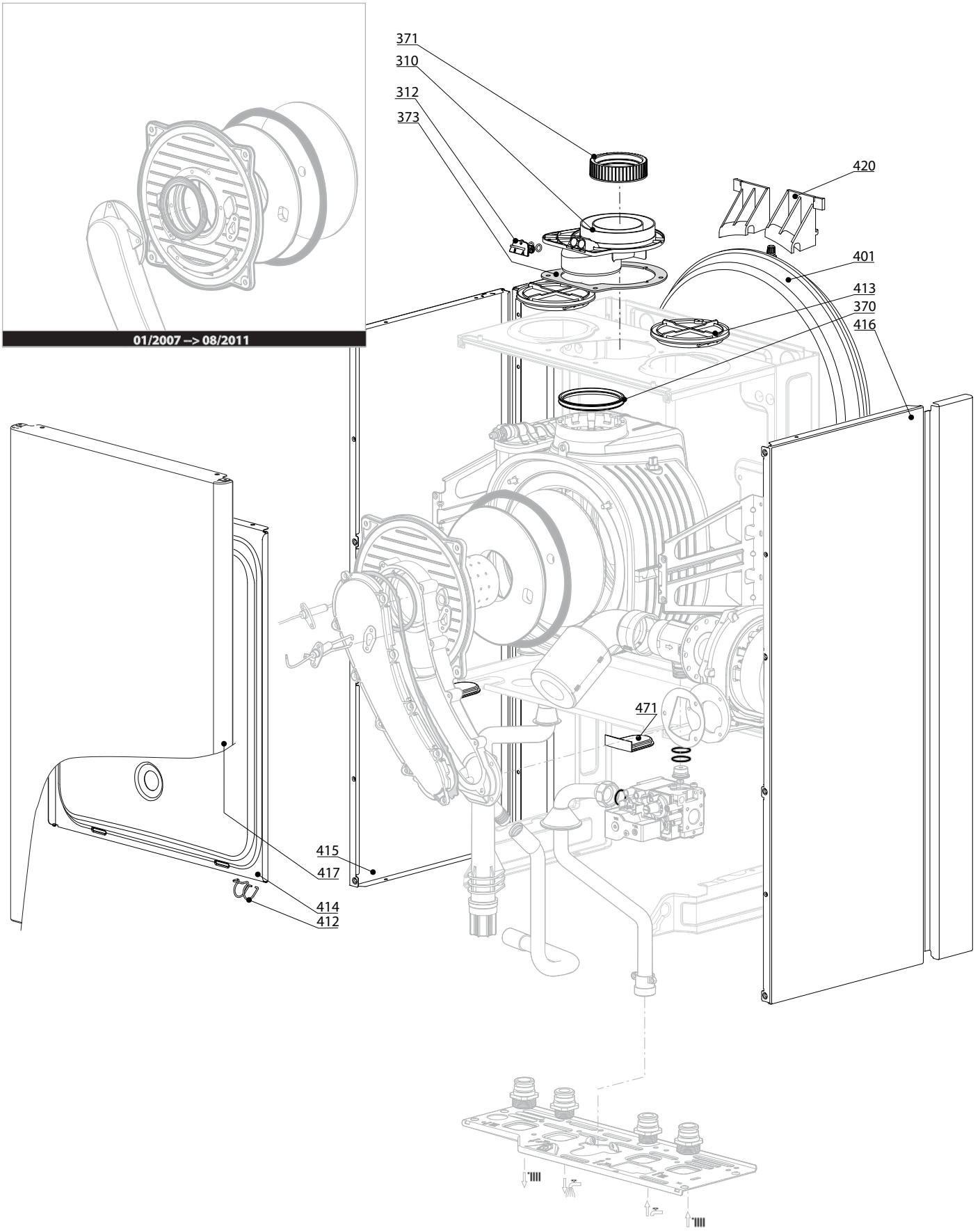


R8208525

| | Description | Manf. Pt. N | Type | 1 GENUS PREMIUM 24 | 2 GENUS PREMIUM 30 | 3 GENUS PREMIUM 35 | 4 GENUS PREMIUM SYS.12 | 5 GENUS PREMIUM SYS. 18 | 6 GENUS PREMIUM SYS. 24 | 7 GENUS PREMIUM SYS. 30 | 8 GENUS PREMIUM SYS. 35 | 9 CLAS PREMIUM 24 | 10 CLAS PREMIUM 30 | 11 CLAS PREMIUM SYS. 24 | 12 | 13 | 14 | 15 | 16 | 17 | 18 | From | to |
|---|---|---|---|---|---|---|---|---|---|---|---|---|---|---|---|---|---|---|---|---|---|---|---|
| 0300 | ДЫМОУДАЛЕНИЕ И ВОЗДУХОПОДАЧА | | | | | | | | | | | | | | | | | | | | | | |
| 0310 | ПАТРУБОК ДЫМОУДАЛЕНИЯ | 60000523 | | ● | ● | ● | ● | ● | ● | ● | ● | ● | ● | ● | | | | | | | | | |
| 0312 | ЗАГЛУШКА ШТУЦ-ОВ АНАЛИЗА ДЫМ. ГАЗОВ | 65104295 | | ● | ● | ● | ● | ● | ● | ● | ● | ● | ● | ● | | | | | | | | | |
| 0370 | О-КОЛЬЦО 80 ММ | 60000315 | | ● | ● | ● | ● | ● | ● | ● | ● | ● | ● | ● | | | | | | | | | |
| 0371 | ПРОКЛАДКА | 60000316 | | ● | ● | ● | ● | ● | ● | ● | ● | ● | ● | ● | | | | | | | | | |
| 0373 | ПРОКЛАДКА | 60000317 | | ● | ● | ● | ● | ● | ● | ● | ● | ● | ● | ● | | | | | | | | | |
| 0400 | КОРПУС | | | | | | | | | | | | | | | | | | | | | | |
| 0401 | РАСШИРИТЕЛЬНЫЙ БАК 8Л | 65104261 | | ● | ● | ● | ● | ● | ● | ● | ● | ● | ● | ● | | | | | | | | | |
| 0412 | ПРУЖИНА ПЕРЕДНЕЙ ПАНЕЛИ | 65104298 | | ● | ● | ● | ● | ● | ● | ● | ● | ● | ● | ● | | | | | | | | | |
| 0413 | ЗАГЛУШКА ПОДАЧИ ВОЗДУХА | 65104249 | | ● | ● | ● | ● | ● | ● | ● | ● | ● | ● | ● | | | | | | | | | |
| 0414 | ГЕРМЕТИЗИРУЮЩАЯ КРЫШКА | 65105678-02 | | ● | ● | ● | ● | ● | ● | ● | ● | ● | ● | ● | | | | | | | | | |
| 0415 | ПАНЕЛЬ КОРПУСА (ЛЕВАЯ) | 65104242 | | ● | | | ● | ● | ● | | | ● | | ● | | | | | | | | | 05/07 |
| | ПАНЕЛЬ КОРПУСА (ЛЕВАЯ) | 65105676 | | ● | | | ● | ● | ● | | | ● | | ● | | | | | | | | 06/07 | |
| | ПАНЕЛЬ КОРПУСА (ЛЕВАЯ) | 60000980 | | | ● | ● | | | | ● | ● | | ● | | | | | | | | | 06/07 | |
| | ПАНЕЛЬ КОРПУСА (ЛЕВАЯ) | 60000984 | | | ● | ● | | | | ● | | | ● | | | | | | | | | | 05/07 |
| 0416 | ПАНЕЛЬ КОРПУСА (ПРАВАЯ) | 65104241 | | ● | | | ● | ● | ● | | | ● | | ● | | | | | | | | | 05/07 |
| | ПАНЕЛЬ КОРПУСА (ПРАВАЯ) | 65105677 | | ● | | | ● | ● | ● | | | ● | | ● | | | | | | | | 06/07 | |
| | ПАНЕЛЬ КОРПУСА (ПРАВАЯ) | 60000979 | | | ● | ● | | | | ● | ● | | ● | | | | | | | | | 06/07 | |
| | ПАНЕЛЬ КОРПУСА (ПРАВАЯ) | 60000985 | | | ● | ● | | | | ● | | | ● | | | | | | | | | | 05/07 |
| 0417 | ПАНЕЛЬ КОРПУСА (ПЕРЕДНЯЯ) | 60000620 | | ● | ● | ● | ● | ● | ● | ● | ● | ● | ● | ● | | | | | | | | | |
| 0418 | ДЕКОРАТИВНАЯ КРЫШКА | 60000549 | | ● | ● | ● | ● | ● | ● | ● | ● | ● | ● | ● | | | | | | | | | |
| 0420 | КРОНШТЕЙН РАСШИРИТЕЛЬНОГО БАКА | 65104696 | | ● | ● | ● | ● | ● | ● | ● | ● | ● | ● | ● | | | | | | | | | |
| 0470 | УПЛОТНЕНИЕ ДЛЯ КАБЕЛЯ | 60000540 | | ● | ● | ● | ● | ● | ● | ● | ● | ● | ● | ● | | | | | | | | | |
| 0471 | УПЛОТНЕНИЕ ДЛЯ КАБЕЛЯ | 60000541 | | ● | ● | ● | ● | ● | ● | ● | ● | ● | ● | ● | | | | | | | | | |

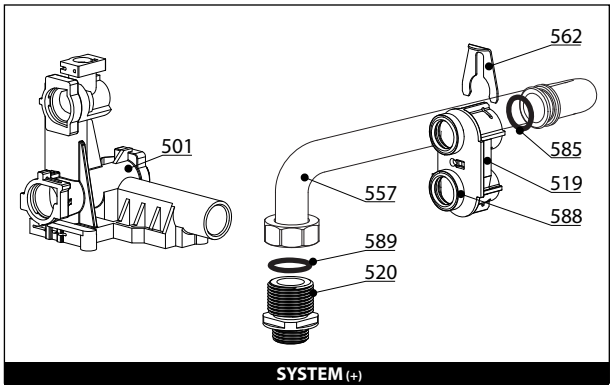


SYSTEM (+)

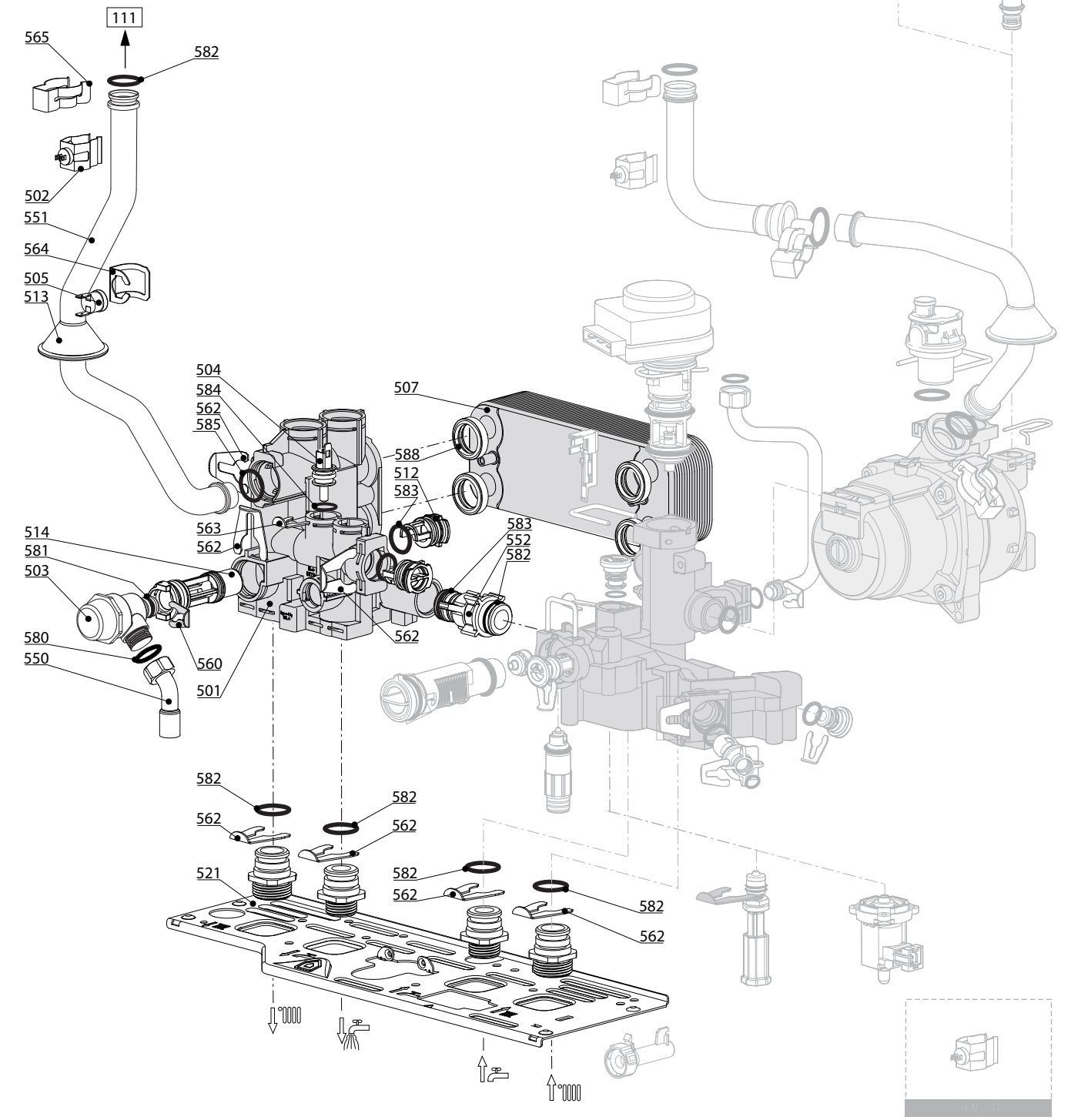


R8208580

| | Description | Manf. Pt. N | Type | GENUS PREMIUM 24 | GENUS PREMIUM 30 | GENUS PREMIUM 35 | GENUS PREMIUM SYS.12 | GENUS PREMIUM SYS. 18 | GENUS PREMIUM SYS. 24 | GENUS PREMIUM SYS. 30 | GENUS PREMIUM SYS. 35 | CLAS PREMIUM 24 | CLAS PREMIUM 30 | CLAS PREMIUM SYS. 24 | | | | | | | | | |
|---|---|---|---|---|---|---|---|---|---|---|---|---|---|---|---|---|---|---|---|---|---|---|---|
| | | | | 1 | 2 | 3 | 4 | 5 | 6 | 7 | 8 | 9 | 10 | 11 | 12 | 13 | 14 | 15 | 16 | 17 | 18 | From | to |
| 0500 | ГРУППА ПОДАЧИ | | | | | | | | | | | | | | | | | | | | | | |
| 0501 | ГРУППА ПОДАЧИ | 65105091-01 | | | | | ● | ● | ● | ● | ● | | | ● | | | | | | | | | |
| | ГРУППА ПОДАЧИ В СБОРЕ | 60002320 | | ● | ● | ● | | | | | | ● | ● | | | | | | | | | | |
| 0502 | ДАТЧИК ТЕМПЕРАТУРЫ + КЛИПСА | 990686-01 | | ● | ● | ● | ● | ● | ● | ● | ● | ● | ● | ● | | | | | | | | | |
| 0503 | ПРЕДОХРАНИТЕЛЬНЫЙ КЛАПАН (3 БАРА) | 61312668 | | ● | ● | ● | ● | ● | ● | ● | ● | ● | ● | ● | | | | | | | | | |
| 0504 | ДАТЧИК ТЕМПЕРАТУРЫ | 65104338 | | ● | ● | ● | | | | | | ● | ● | | | | | | | | | | |
| 0505 | ТЕРМОСТАТ ПЕРЕГРЕВА 100°C | 61010572 | | ● | ● | ● | ● | ● | ● | ● | ● | ● | ● | ● | | | | | | | | | |
| 0507 | ТЕПЛООБМЕННИК ГВС (16 ПЛАСТИН) | 65104333 | | ● | ● | ● | | | | | | ● | ● | | | | | | | | | | |
| 0512 | ЗАГЛУШКА | 65104445 | | ● | ● | ● | ● | ● | ● | ● | ● | ● | ● | ● | | | | | | | | | |
| 0513 | УПЛОТНЕНИЕ | 61010109 | | ● | ● | ● | ● | ● | ● | ● | ● | ● | ● | ● | | | | | | | | | |
| 0514 | БАЙПАС | 65104336 | | ● | ● | ● | ● | ● | ● | ● | ● | ● | ● | ● | | | | | | | | | |
| 0519 | ПЕРЕХОДНИК 'System +' Open | 60001365 | SYST. + | | | | ● | ● | ● | ● | ● | | | ● | | | | | | | | | |
| | ПЕРЕХОДНИК 'System' Close | 65105181 | SYST. | | | | ● | ● | ● | ● | ● | | | ● | | | | | | | | | |
| 0520 | СОЕДИНЕНИЕ (3/4"-1/2") | 60001367 | | | | | ● | ● | ● | ● | ● | | | ● | | | | | | | | | |
| 0521 | ОСНОВАНИЕ ГИДРАВЛИЧЕСКОЙ ГРУППЫ | 65104311 | | ● | ● | ● | | | | | | ● | ● | | | | | | | | | | |
| 0550 | ПАТРУБОК ПРЕДОХРАНИТЕЛЬНОГО КЛАПАНА | 65104447 | | ● | ● | ● | ● | ● | ● | ● | ● | ● | ● | ● | | | | | | | | | |
| 0551 | ТРУБКА ПОДАЧИ ТЕПЛОНОСИТЕЛЯ | 60000534 | | ● | ● | | | ● | ● | ● | | ● | ● | ● | | | | | | | | | |
| | ТРУБКА ПОДАЧИ ТЕПЛОНОСИТЕЛЯ | 60000590 | | | | ● | | | | | ● | | | | | | | | | | | | |
| | ТРУБКА ПОДАЧИ ТЕПЛОНОСИТЕЛЯ | 65108219 | | | | | ● | | | | | | | | | | | | | | | | |
| 0552 | ПАТРУБОК БАЙПАСА | 65104340 | | ● | ● | ● | ● | ● | ● | ● | ● | ● | ● | ● | | | | | | | | | |
| 0557 | ТРУБКА SYSTEM | 60001366 | | | | | ● | ● | ● | ● | ● | | | ● | | | | | | | | | |
| 0560 | КЛИПСА D:10 | 65104260 | | ● | ● | ● | ● | ● | ● | ● | ● | ● | ● | ● | | | | | | | | | |
| 0562 | КЛИПСА D:18 | 65104259 | | ● | ● | ● | ● | ● | ● | ● | ● | ● | ● | ● | | | | | | | | | |
| 0563 | КЛИПСА | 65104339 | | ● | ● | ● | | | | | | ● | ● | | | | | | | | | | |
| 0564 | КЛИПСА | 61010050 | | ● | ● | ● | ● | ● | ● | ● | ● | ● | ● | ● | | | | | | | | | |
| 0565 | КЛИПСА | 60000309 | | ● | ● | ● | ● | ● | ● | ● | ● | ● | ● | ● | | | | | | | | | |
| 0580 | ПЛОСКАЯ ПРОКЛАДКА D:13.9-10.4-1.5 | 60061853-02 | | ● | ● | ● | ● | ● | ● | ● | ● | ● | ● | ● | | | | | | | | | |
| 0581 | О-КОЛЬЦО 17.96X2.62 | 65104337 | | ● | ● | ● | ● | ● | ● | ● | ● | ● | ● | ● | | | | | | | | | |
| 0582 | О-КОЛЬЦО 17.86X2.62 | 61308091 | | ● | ● | ● | ● | ● | ● | ● | ● | ● | ● | ● | | | | | | | | | |
| 0583 | О-КОЛЬЦО 15.54X2.62 | 65104325 | | ● | ● | ● | ● | ● | ● | ● | ● | ● | ● | ● | | | | | | | | | |
| 0584 | О-КОЛЬЦО 11.91X2.62 | 60000850 | | ● | ● | ● | | | | | | ● | ● | | | | | | | | | | |
| 0585 | О-КОЛЬЦО 17.04X3.53 | 65104262 | | ● | ● | ● | ● | ● | ● | ● | ● | ● | ● | ● | | | | | | | | | |
| 0588 | ПРОКЛАДКА ТЕПЛООБМЕННИКА | 65104334 | | ● | ● | ● | ● | ● | ● | ● | ● | ● | ● | ● | | | | | | | | | |
| 0589 | ПЛОСКАЯ ПРОКЛАДКА D:24-14-1.5 | 60061855-17 | | | | | ● | ● | ● | ● | ● | | | ● | | | | | | | | | |

600

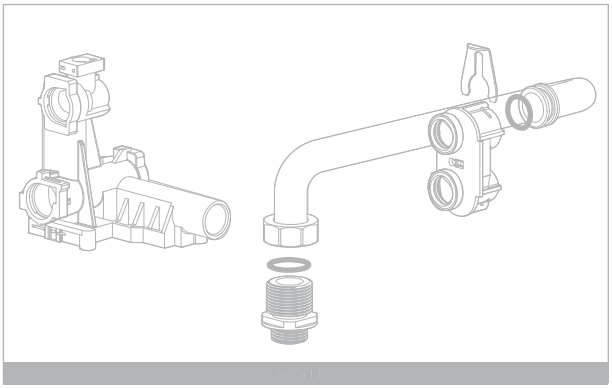

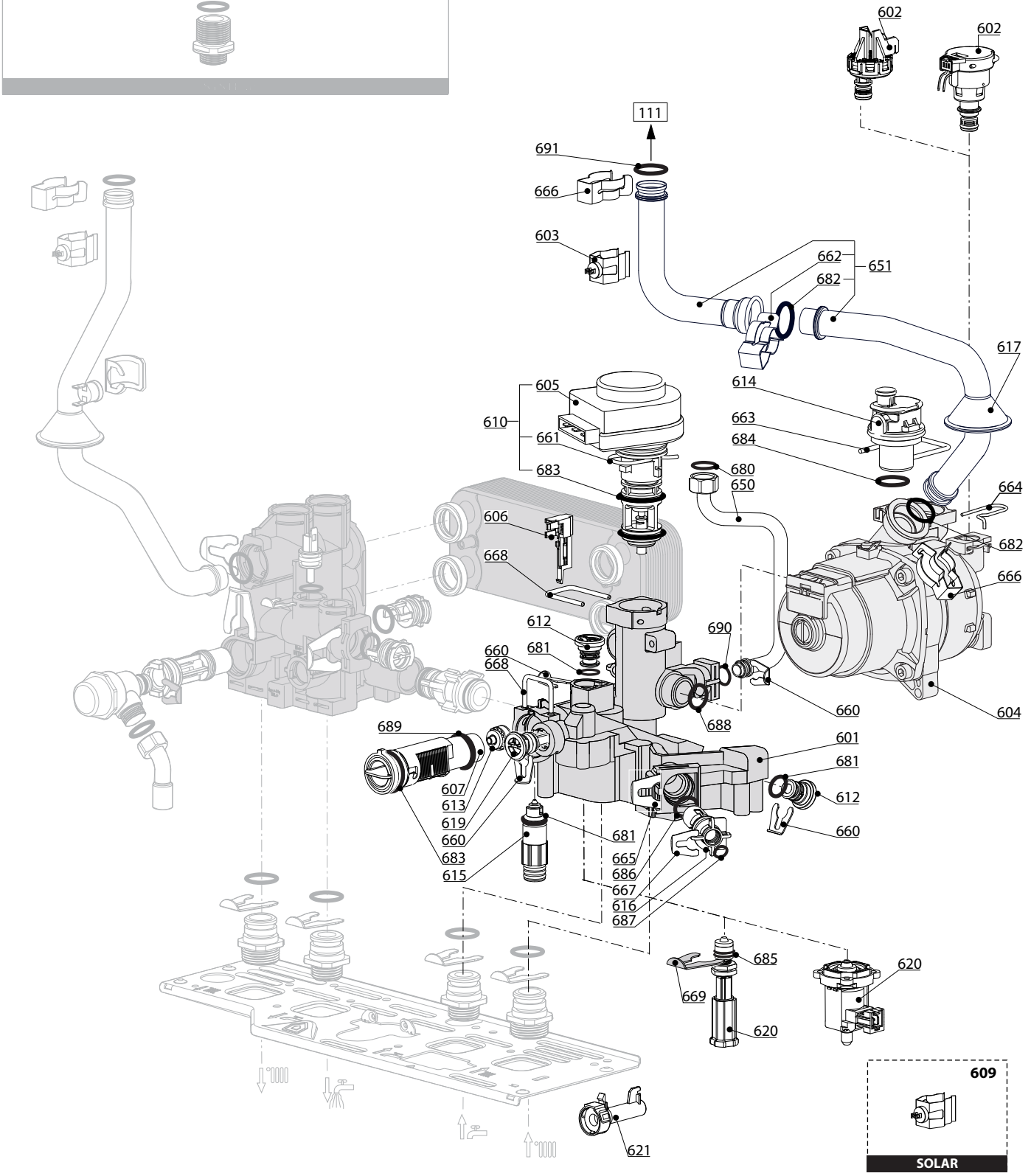


R8208610

| | Description | Manf. Pt. N | Type | 1 GENUS PREMIUM 24 | 2 GENUS PREMIUM 30 | 3 GENUS PREMIUM 35 | 4 GENUS PREMIUM SYS.12 | 5 GENUS PREMIUM SYS. 18 | 6 GENUS PREMIUM SYS. 24 | 7 GENUS PREMIUM SYS. 30 | 8 GENUS PREMIUM SYS. 35 | 9 CLAS PREMIUM 24 | 10 CLAS PREMIUM 30 | 11 CLAS PREMIUM SYS. 24 | 12 | 13 | 14 | 15 | 16 | 17 | 18 | From | to |
|---|---|---|---|---|---|---|---|---|---|---|---|---|---|---|---|---|---|---|---|---|---|---|---|
| 0600 | ГРУППА ВОЗВРАТА | | | | | | | | | | | | | | | | | | | | | | |
| 0601 | ГРУППА ВОЗВРАТА | 65104335 | | | | | | | | | | ● | ● | | | | | | | | | | |
| | ГРУППА ВОВЗРАТА | 65105322 | | ● | ● | ● | ● | ● | ● | ● | ● | | | ● | | | | | | | | | |
| 0602 | РЕЛЕ ДАВЛЕНИЯ | 65105090 | | | | | | | | | | ● | ● | | | | | | | | | | |
| | ДАТЧИК ДАВЛЕНИЯ | 65104321 | | ● | ● | ● | ● | ● | ● | ● | ● | | | ● | | | | | | | | | |
| 0603 | ДАТЧИК ТЕМПЕРАТУРЫ + КЛИПСА | 990686-01 | | ● | ● | ● | ● | ● | ● | ● | ● | ● | ● | ● | | | | | | | | | |
| 0604 | НАСОС 5М PWM ENER+ | 60001947 | ENER + | ● | ● | ● | ● | ● | ● | ● | ● | | | | | | | | | | | | |
| | НАСОС 6М 2V WILO | 60000591 | WILO | ● | ● | ● | ● | ● | ● | ● | | ● | ● | ● | | | | | | | | | |
| 0605 | МОТОР 3-Х ХОДОВОГО КЛАПАНА | 61302483-01 | | ● | ● | ● | ● | ● | ● | ● | ● | ● | ● | ● | | | | | | | | | |
| 0606 | ДАТЧИК ПРОТОКА (ГЕРКОН) | 65104323 | | ● | ● | ● | | | | | | ● | ● | | | | | | | | | | |
| 0607 | ЗАГЛУШКА ГВС | 65105179 | | | | | ● | ● | ● | ● | ● | | | ● | | | | | | | | | |
| | ДАТЧИК ПРОТОКА (ТУРБИНКА) | 65104317 | | ● | ● | ● | | | | | | ● | ● | | | | | | | | | | |
| 0610 | 3-Х ХОДОВОЙ КЛАПАН + МОТОР (KIT) | 60001583-01 | | ● | ● | ● | | | | | | ● | ● | | | | | | | | | | |
| | 3-Х ХОДОВОЙ КЛАПАН + МОТОР (KIT) | 60001583-01 | SYST. + | | | | ● | ● | ● | ● | ● | | | ● | | | | | | | | | |
| | ЗАГЛУШКА | 65105093 | SYST. | | | | ● | ● | ● | ● | ● | | | ● | | | | | | | | | |
| 0612 | ЗАГЛУШКА | 65104377 | | ● | ● | ● | ● | ● | ● | ● | ● | ● | ● | ● | | | | | | | | | |
| 0613 | ОГРАНИЧИТЕЛЬ ПРОТОКА | 65104318 | | ● | ● | ● | | | | | | ● | ● | | | | | | | | | | |
| 0614 | АВТОМАТ. ВОЗДУХООТВОДЧИК ENER+ | 65112086 | ENER + | ● | ● | ● | ● | ● | ● | ● | ● | | | | | | | | | | | | |
| | АВТОМАТ. ВОЗДУХООТВОДЧИК WILO + O-RING | 65104703 | WILO | ● | ● | ● | ● | ● | ● | ● | | ● | ● | ● | | | | | | | | | |
| 0615 | КРАН ДЛЯ СЛИВА | 60001385 | | ● | ● | ● | ● | ● | ● | ● | ● | ● | ● | ● | | | | | | | | | |
| 0616 | ВОДЯНОЙ ФИЛЬТР | 60001372 | | ● | ● | ● | ● | ● | ● | ● | ● | ● | ● | ● | | | | | | | | | |
| 0617 | УПЛОТНЕНИЕ | 61010109 | | ● | ● | ● | ● | ● | ● | ● | ● | ● | ● | ● | | | | | | | | | |
| 0619 | ОБРАТНЫЙ КЛАПАН И ФИЛЬТР ПОДПИТКИ | 65105323 | | ● | ● | ● | ● | ● | ● | ● | ● | ● | ● | ● | | | | | | | | | |
| 0620 | КЛАПАН ПОЛУАВТОМАТИЧЕСКОЙ ПОДПИТКИ | 65104669 | | ● | ● | ● | ● | ● | ● | ● | ● | | | ● | | | | | | | | | |
| | КРАН ПОДПИТКИ | 65114261 | | | | | | | | | | ● | ● | | | | | | | | | | |
| 0621 | МАГНИТ | 65104670 | | ● | ● | ● | ● | ● | ● | ● | ● | ● | ● | ● | | | | | | | | | |
| 0650 | ТРУБКА РАСШИРИТЕЛЬНОГО БАКА | 65104253 | | ● | ● | ● | ● | ● | ● | ● | ● | ● | ● | ● | | | | | | | | | |
| 0651 | ТРУБКА ВОЗВРАТА ТЕПЛОНОСИТЕЛЯ | 60000528 | | ● | ● | ● | | | ● | ● | ● | ● | ● | ● | | | | | | | | | |
| | ТРУБКА ВОЗВРАТА ТЕПЛОНОСИТЕЛЯ | 65108220 | | | | | ● | ● | | | | | | | | | | | | | | | |
| 0660 | КЛИПСА D:10 | 65104260 | | ● | ● | ● | ● | ● | ● | ● | ● | ● | ● | ● | | | | | | | | | |
| 0661 | КЛИПСА | 65104332 | | ● | ● | ● | ● | ● | ● | ● | ● | ● | ● | ● | | | | | | | | | |
| 0662 | КЛИПСА | 61307589 | | ● | ● | ● | ● | ● | ● | ● | ● | ● | ● | ● | | | | | | | | | |
| 0663 | U-КЛИПСА | 65104704 | | ● | ● | ● | ● | ● | ● | ● | ● | ● | ● | ● | | | | | | | | | |
| 0664 | КЛИПСА | 65104322 | | ● | ● | ● | ● | ● | ● | ● | ● | ● | ● | ● | | | | | | | | | |
| 0665 | КЛИПСА | 65104331 | | ● | ● | ● | ● | ● | ● | ● | ● | ● | ● | ● | | | | | | | | | |
| 0666 | КЛИПСА | 60000309 | | ● | ● | ● | ● | ● | ● | ● | ● | ● | ● | ● | | | | | | | | | |
| 0667 | КЛИПСА | 65100680 | | ● | ● | ● | ● | ● | ● | ● | ● | ● | ● | ● | | | | | | | | | |
| 0668 | КЛИПСА | 65104316 | | ● | ● | ● | ● | ● | ● | ● | ● | ● | ● | ● | | | | | | | | | |
| 0669 | КЛИПСА | 65104339 | | ● | ● | ● | ● | ● | ● | ● | ● | ● | ● | ● | | | | | | | | | |
| 0680 | ПРОКЛАДКА 3/8" | 573521 | | ● | ● | ● | ● | ● | ● | ● | ● | ● | ● | ● | | | | | | | | | |
| 0681 | О-КОЛЬЦО 9.19Х2.62 | 65104313 | | ● | ● | ● | ● | ● | ● | ● | ● | ● | ● | ● | | | | | | | | | |
| 0682 | О-КОЛЬЦО 17.04Х3.53 | 65104262 | | ● | ● | ● | ● | ● | ● | ● | ● | ● | ● | ● | | | | | | | | | |
| 0683 | О-КОЛЬЦО 23.47Х2.62 | 65104315 | | ● | ● | ● | ● | ● | ● | ● | ● | ● | ● | ● | | | | | | | | | |
| 0684 | О-КОЛЬЦО 35Х3 EPDM 75 SH | 65104705 | | ● | ● | ● | ● | ● | ● | ● | ● | ● | ● | ● | | | | | | | | | |
| 0685 | О-КОЛЬЦО 7.65Х1.78 | 65104329 | | ● | ● | ● | ● | ● | ● | ● | ● | ● | ● | ● | | | | | | | | | |
| 0686 | О-КОЛЬЦО 15.54Х2.62 | 65104325 | | ● | ● | ● | ● | ● | ● | ● | ● | ● | ● | ● | | | | | | | | | |
| 0687 | О-КОЛЬЦО 5.7Х1.9 | 61009834-10 | | ● | ● | ● | ● | ● | ● | ● | ● | ● | ● | ● | | | | | | | | | |
| 0688 | О-КОЛЬЦО 21.89Х2.62 | 65104320 | | ● | ● | ● | ● | ● | ● | ● | ● | ● | ● | ● | | | | | | | | | |
| 0689 | О-КОЛЬЦО 17.17Х1.78 | 65104303 | | ● | ● | ● | ● | ● | ● | ● | ● | ● | ● | ● | | | | | | | | | |
| 0690 | О-КОЛЬЦО 8.9Х2.7 | 61009834-14 | | ● | ● | ● | ● | ● | ● | ● | ● | ● | ● | ● | | | | | | | | | |
| 0691 | О-КОЛЬЦО 17.86Х2.62 | 61308091 | | ● | ● | ● | ● | ● | ● | ● | ● | ● | ● | ● | | | | | | | | | |

**800**

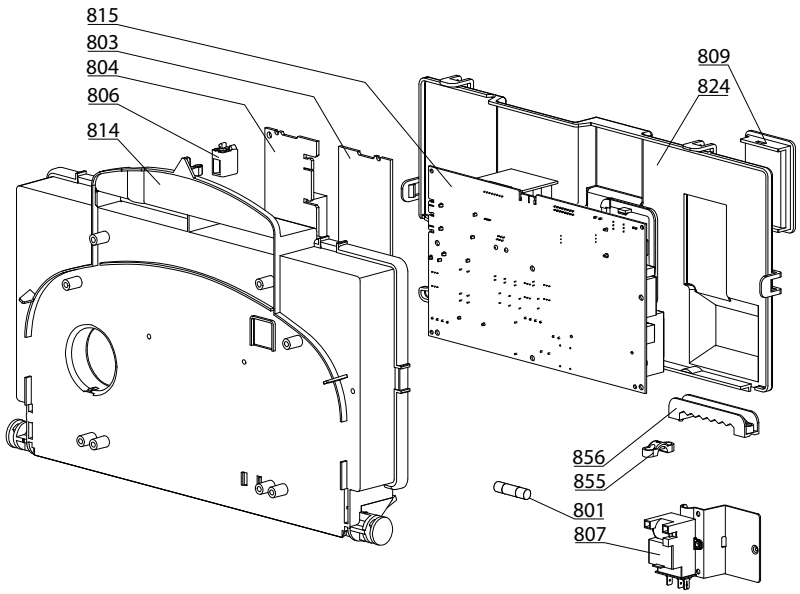


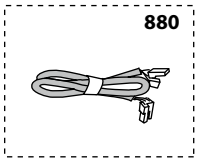


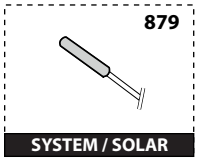


SYSTEM / SOLAR

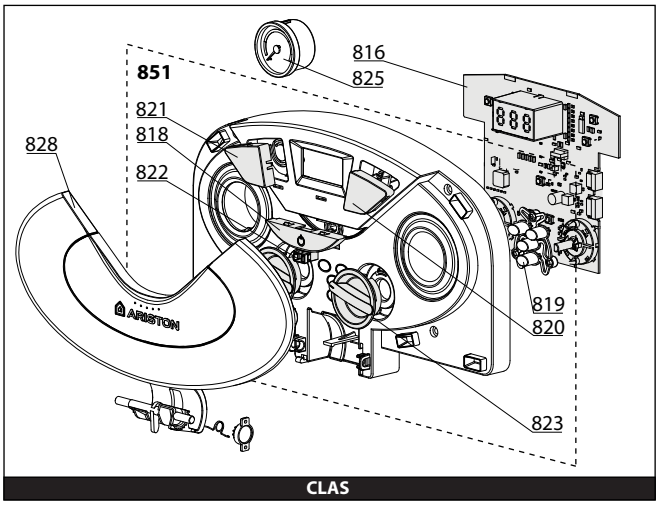


CLAS

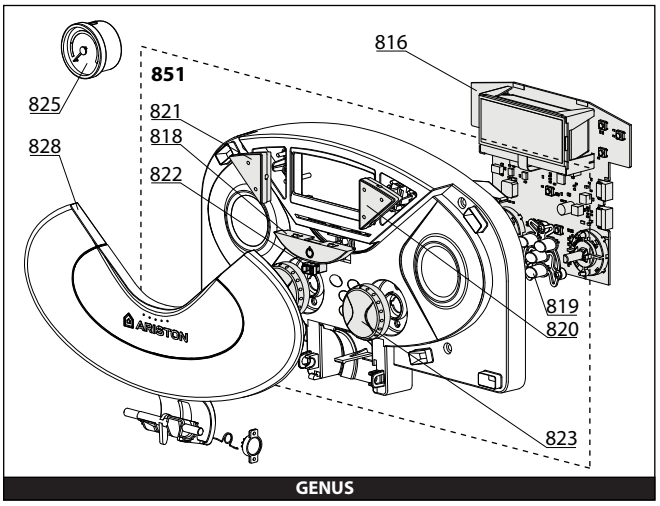


GENUS

R8208676

| | Description | Manf. Pt. N | Type | 1 GENUS PREMIUM 24 | 2 GENUS PREMIUM 30 | 3 GENUS PREMIUM 35 | 4 GENUS PREMIUM SYS.12 | 5 GENUS PREMIUM SYS. 18 | 6 GENUS PREMIUM SYS. 24 | 7 GENUS PREMIUM SYS. 30 | 8 GENUS PREMIUM SYS. 35 | 9 CLAS PREMIUM 24 | 10 CLAS PREMIUM 30 | 11 CLAS PREMIUM SYS. 24 | 12 | 13 | 14 | 15 | 16 | 17 | 18 | From | to |
|---|---|---|---|---|---|---|---|---|---|---|---|---|---|---|---|---|---|---|---|---|---|---|---|
| 0800 | ЭЛЕКТРИЧЕСКАЯ ЧАСТЬ | | | | | | | | | | | | | | | | | | | | | | |
| 0801 | ПРЕДОХРАНИТЕЛЬ 250V 2A | 61003456 | | ● | ● | ● | ● | ● | ● | ● | ● | ● | ● | ● | | | | | | | | | |
| 0803 | ПЛАТА ШИНЫ ДАННЫХ E-BUS | 65109108 | | ● | ● | ● | ● | ● | ● | ● | ● | ● | ● | ● | | | | | | | | | |
| 0804 | ПЛАТА УПРАВЛЕНИЯ СОЛН. КОЛЛЕКТОРОМ | 65107038 | | ● | | | ● | | | | | | | | | | | | | | | | |
| 0806 | ЗАЩЕЛКА | 65104228 | | ● | ● | ● | ● | ● | ● | ● | ● | ● | ● | ● | | | | | | | | | |
| 0807 | БЛОК РОЗЖИГА | 61002105-20 | | ● | ● | ● | ● | ● | ● | ● | ● | ● | ● | ● | | | | | | | | | |
| 0809 | КРЫШКА ИНСПЕКЦИОННАЯ | 65104294 | | ● | ● | ● | ● | ● | ● | ● | ● | ● | ● | ● | | | | | | | | | |
| 0814 | КОРПУС БЛОКА УПРАВЛЕНИЯ (FRONT) | 65104300 | | ● | ● | ● | ● | ● | ● | ● | ● | ● | ● | ● | | | | | | | | | |
| 0815 | ОСНОВНАЯ ПЛАТА | 65109138-03 | | ● | ● | ● | ● | ● | ● | ● | ● | ● | ● | ● | | | | | | | | | |
| 0816 | ПЛАТА ДИСПЛЕЯ | 65104448 | | | | | | | | | | ● | ● | ● | | | | | | | | | |
| | ПЛАТА ДИСПЛЕЯ | 65105149-02 | | ● | ● | ● | ● | ● | ● | ● | ● | | | | | | | | | | | | |
| 0818 | КНОПКА (ВКЛ/ВЫКЛ) | 65104267 | | ● | ● | ● | ● | ● | ● | ● | ● | ● | ● | ● | | | | | | | | | |
| 0819 | КНОПКИ ВЫБОРА ПАРАМЕТРОВ МЕНЮ | 60000740 | | | | | ● | ● | ● | ● | ● | | | | | | | | | | | | |
| | КНОПКИ ВЫБОРА ПАРАМЕТРОВ МЕНЮ | 65104264 | | ● | ● | ● | | | | | | | | | | | | | | | | | |
| | КНОПКИ ВЫБОРА ПАРАМЕТРОВ МЕНЮ | 65104503 | | | | | | | | | | ● | ● | ● | | | | | | | | | |
| 0820 | КНОПКА УПРАВЛЕНИЯ (ПРАВАЯ) | 65104222 | | | | | | | | | | ● | ● | ● | | | | | | | | | |
| | КНОПКА УПРАВЛЕНИЯ (ПРАВАЯ) | 65104268 | | ● | ● | ● | ● | ● | ● | ● | ● | | | | | | | | | | | | |
| 0821 | КНОПКА УПРАВЛЕНИЯ (ЛЕВАЯ) | 65104229 | | | | | | | | | | ● | ● | ● | | | | | | | | | |
| | КНОПКА УПРАВЛЕНИЯ (ЛЕВАЯ) | 65104269 | | ● | ● | ● | ● | ● | ● | ● | ● | | | | | | | | | | | | |
| 0822 | ФИКСАТОР КРЫШКИ ПАНЕЛИ УПРАВЛЕНИЯ | 65100676 | | ● | ● | ● | ● | ● | ● | ● | ● | ● | ● | ● | | | | | | | | | |
| 0823 | РУЧКА РЕГУЛИРОВКИ | 65104235 | | ● | ● | ● | ● | ● | ● | ● | ● | | | | | | | | | | | | |
| | РУЧКА РЕГУЛИРОВКИ | 65104450 | | | | | | | | | | ● | ● | ● | | | | | | | | | |
| | ЗАГЛУШКА | 60000744 | | | | | ● | ● | ● | ● | ● | | | | | | | | | | | | |
| 0824 | КОРПУС БЛОКА УПРАВЛЕНИЯ (REAR) | 65104293 | | ● | ● | ● | ● | ● | ● | ● | ● | ● | ● | ● | | | | | | | | | |
| 0825 | МАНОМЕТР | 65104234 | | ● | ● | ● | ● | ● | ● | ● | | ● | ● | ● | | | | | | | | | |
| 0828 | ПЕРЕДНЯЯ КРЫШКА ПАНЕЛИ УПРАВЛЕНИЯ | 60000569 | | ● | ● | ● | ● | ● | ● | ● | ● | | | | | | | | | | | | |
| | ПЕРЕДНЯЯ КРЫШКА ПАНЕЛИ УПРАВЛЕНИЯ | 65104449 | | | | | | | | | | ● | ● | ● | | | | | | | | | |
| 0851 | ПАНЕЛЬ УПРАВЛЕНИЯ В СБОРЕ | 60000734 | | | | | | | | | | ● | ● | ● | | | | | | | | | |
| | ПАНЕЛЬ УПРАВЛЕНИЯ В СБОРЕ | 60001373 | | ● | ● | ● | ● | ● | ● | ● | ● | | | | | | | | | | | | |
| 0855 | ЗАЖИМ ДЛЯ КАБЕЛЯ | 571562 | | ● | ● | ● | ● | ● | ● | ● | ● | ● | ● | ● | | | | | | | | | |
| 0856 | ЗАЖИМ ДЛЯ КАБЕЛЯ | 65103377 | | ● | ● | ● | ● | ● | ● | ● | ● | ● | ● | ● | | | | | | | | | |
| 0879 | ДАТЧИК БОЙЛЕРА | 60000454 | | | | | ● | ● | ● | ● | ● | | | ● | | | | | | | | | |
| | ДАТЧИК ТЕМПЕРАТУРЫ ГВС (СОЛНЦЕ) (1M) | 65112036 | SOLAR | ● | | | ● | | | | | | | | | | | | | | | | |
| 0880 | КАБЕЛЬ 3-Х ХОДОВОГО КЛАПАНА | 65104523 | / CN09 | ● | ● | ● | ● | ● | ● | ● | ● | ● | ● | ● | | | | | | | | | |
| | КАБЕЛЬ ЭЛЕКТРОДА РОЗЖИГА | 60000527 | | ● | ● | ● | ● | ● | ● | ● | ● | ● | ● | ● | | | | | | | | | |
| | КАБЕЛЬ ЭЛЕКТРОДА ИОНИЗАЦИИ | 60000567 | / CN05 | ● | ● | ● | ● | ● | ● | ● | ● | ● | ● | ● | | | | | | | | | |
| | ШЛЕЙФ ПЕРЕДАЧИ ДАННЫХ | 65106893 | / CN24 | ● | | | ● | | | | | | | | | | | | | | | | |
| | КАБЕЛЬ ПЛАТЫ ШИНЫ ДАННЫХ E-BUS | 65105169 | / CN11 | ● | ● | ● | ● | ● | ● | ● | ● | ● | ● | ● | | | | | | | | | |
| | КАБЕЛЬ ДИСПЛЕЯ (5 WIRES BLUES) | 60000746 | / CN02 | ● | ● | ● | ● | ● | ● | ● | ● | ● | ● | ● | | | | | | | | | |
| | КАБЕЛЬ ЗАЗЕМЛЕНИЯ | 65104286 | | ● | ● | ● | ● | ● | ● | ● | ● | ● | ● | ● | | | | | | | | | |
| | КАБЕЛЬ ПИТАНИЯ 240V | 60000542 | / CN20 | ● | ● | ● | ● | ● | ● | ● | ● | ● | ● | ● | | | | | | | | | |
| | КАБЕЛЬ ДАТЧИКА ПРОТОКА | 60000813 | / CN14 | ● | ● | ● | ● | ● | ● | ● | ● | ● | ● | ● | | | | | | | | | |
| | КАБЕЛЬ БЛОК РОЗЖИГА - ГАЗОВЫЙ КЛАПАН | 60000543 | / CN03 | ● | ● | ● | ● | ● | ● | ● | ● | ● | ● | ● | | | | | | | | | |
| | КАБЕЛЬ ТЕРМ. ПЕРЕГРЕВА - ДАТЧ./РЕЛЕ ДАВЛ. | 60000742 | / CN04 | | | | ● | ● | ● | ● | ● | | | | | | | | | | | | |
| | КАБЕЛЬ ТЕРМ. ПЕРЕГРЕВА - ДАТЧ./РЕЛЕ ДАВЛ. | 60001135 | / CN04 | ● | ● | ● | | | | | | ● | ● | ● | | | | | | | | | |
| | КАБЕЛЬ ДАТЧИК ТЕПЛООБМЕН. - ВЕНТИЛЯТОР | 60001234 | / CN22 | ● | ● | ● | ● | ● | ● | ● | ● | ● | ● | ● | | | | | | | | | |
| | КАБЕЛЬ НАСОСА 2V 6M WILO | 65109585 | WILO | ● | ● | ● | ● | ● | ● | ● | | ● | ● | ● | | | | | | | | | |
| | КАБЕЛЬ НАСОСА 1V MOD. ENER+ | 60001595 | ENER + | ● | ● | ● | ● | ● | ● | ● | ● | | | | | | | | | | | | |
| | КАБЕЛЬ КОМНАТНОГО ТЕРМОСТАТА | 60001253 | / CN25 | ● | ● | ● | ● | ● | ● | ● | ● | ● | ● | ● | | | | | | | | | |
| | КАБЕЛЬ ДАТЧИКА СОЛН. КОЛЛЕКТОРА | 60001374 | / CN17 | ● | ● | ● | ● | ● | ● | ● | ● | ● | ● | ● | | | | | | | | | |
| | КАБЕЛЬ КЛАПАНА ПОДПИТКИ | 65104525 | / CN12 | ● | ● | ● | ● | ● | ● | ● | ● | | | ● | | | | | | | | | |

## 900

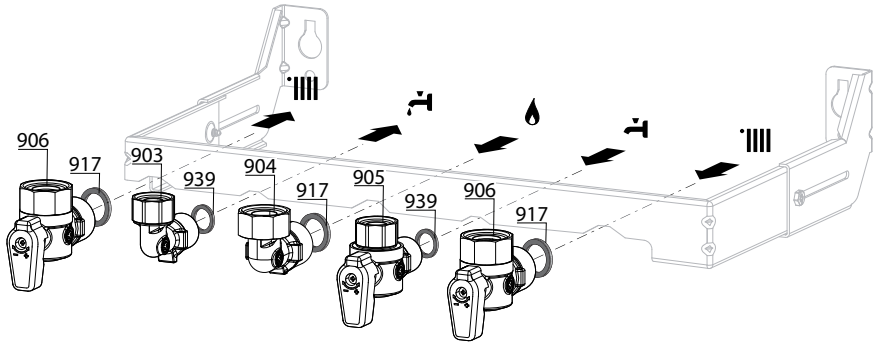


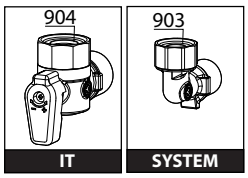


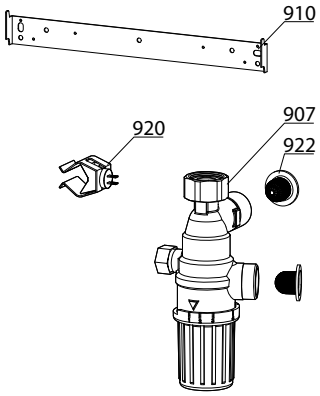


## 5000

| 5001 | 5002 | 5020 |
|---|---|---|
| Transf. gaz > GPL<br>Conv. gas > GPL<br>Trasf. gas > GPL<br>Transf. gas > GPL | Transf. gaz > Nat<br>Conv. gas >Nat<br>Trasf. gas > Met<br>Transf. gas > Met | Options<br>Accessories<br>Opzioni<br>Accessorio |

| | Description | Manf. Pt. N | Type | GENUS PREMIUM 24 | GENUS PREMIUM 30 | GENUS PREMIUM 35 | GENUS PREMIUM SYS.12 | GENUS PREMIUM SYS. 18 | GENUS PREMIUM SYS. 24 | GENUS PREMIUM SYS. 30 | GENUS PREMIUM SYS. 35 | CLAS PREMIUM 24 | CLAS PREMIUM 30 | CLAS PREMIUM SYS. 24 | | | | | | | | | | |
|---|---|---|---|---|---|---|---|---|---|---|---|---|---|---|---|---|---|---|---|---|---|---|---|---|
| | | | | 1 | 2 | 3 | 4 | 5 | 6 | 7 | 8 | 9 | 10 | 11 | 12 | 13 | 14 | 15 | 16 | 17 | 18 | From | | to |
| 0900 | МОНТАЖНЫЕ АКСЕССУАРЫ | | | | | | | | | | | | | | | | | | | | | | | |
| 0903 | ПАТРУБОК ГВС | 60000891 | | ● | ● | ● | | | | | | ● | ● | | | | | | | | | | | |
| 0904 | КРАН ГАЗА | 60000898 | | ● | ● | ● | ● | ● | ● | ● | ● | ● | ● | ● | | | | | | | | | | |
| | СОЕДИНЕНИЕ | 65105631 | | ● | ● | ● | ● | ● | ● | ● | ● | ● | ● | ● | | | | | | | | | | |
| 0905 | КРАН ХОЛОДНОЙ ВОДЫ | 60000895 | | ● | ● | ● | ● | ● | ● | ● | ● | ● | ● | ● | | | | | | | | | | |
| 0906 | КРАН ПОДАЧИ/ВОЗВРАТА ТЕПЛОНОСИТЕЛЯ | 60000885 | | ● | ● | ● | ● | ● | ● | ● | ● | ● | ● | ● | | | | | | | | | | |
| 0907 | ТЕРМОСТАТИЧ. СМЕСИТЕЛЬНЫЙ КЛАПАН | 60001081 | | ● | ● | ● | ● | ● | ● | ● | ● | ● | ● | ● | | | | | | | | | | |
| 0910 | КРОНШТЕЙН | 60000625 | | ● | | | ● | ● | ● | | | ● | | ● | | | | | | | | | | |
| | КРОНШТЕЙН | 60000852 | | | ● | ● | | | | ● | ● | | ● | | | | | | | | | | | |
| 0917 | ПЛОСКАЯ ПРОКЛАДКА D:24-17-1.5 | 60061855-19 | | ● | ● | ● | ● | ● | ● | ● | ● | ● | ● | ● | | | | | | | | | | |
| 0920 | ДАТЧИК ТЕМПЕРАТУРЫ + КЛИПСА | 65105079 | | ● | ● | ● | ● | ● | ● | ● | ● | ● | ● | ● | | | | | | | | | | |
| 0922 | ФИЛЬТР | 60001087 | | ● | ● | ● | ● | ● | ● | ● | ● | ● | ● | ● | | | | | | | | | | |
| 0939 | ПЛОСКАЯ ПРОКЛАДКА D:16.5-11-1.5 | 60061854-14 | | ● | ● | ● | ● | ● | ● | ● | ● | ● | ● | ● | | | | | | | | | | |
| 5000 | АКСЕССУАРЫ | | | | | | | | | | | | | | | | | | | | | | | |
| 5001 | К-Т ПЕРЕВОДА НА СЖИЖЕННЫЙ ГАЗ (LPG) | 60000752 | | ● | | | | ● | ● | | | ● | | ● | | | | | | | | | | |
| | К-Т ПЕРЕВОДА НА СЖИЖЕННЫЙ ГАЗ (LPG) | 60000753 | | | ● | | | | | ● | ● | | ● | | | | | | | | | | | |
| | К-Т ПЕРЕВОДА НА СЖИЖЕННЫЙ ГАЗ (LPG) | 60000754 | | | | ● | | | | | | | | | | | | | | | | | | |
| | К-Т ПЕРЕВОДА НА СЖИЖЕННЫЙ ГАЗ (LPG) | 60001126 | | | | | ● | | | | | | | | | | | | | | | | | |
| 5002 | К-Т ПЕРЕВОДА НА ПРИРОДНЫЙ ГАЗ (NG) | 60001127 | | | | | ● | | | | | | | | | | | | | | | | | |
| 5020 | ПЕРЕХОДНИК РАЗД. СИСТЕМЫ ДЫМОМОУД. | 65104710 | | ● | ● | ● | ● | ● | ● | ● | ● | ● | ● | ● | | | | | | | | | | |
| | КОМПЛЕКТ ДЛЯ ЧИСТКИ КОТЛА | 60000982 | | ● | ● | ● | ● | ● | ● | ● | ● | ● | ● | ● | | | | | | | | | | |
| | ДЕКОРАТИВНАЯ НИЖНЯЯ КРЫШКА | 60000626 | | ● | | | ● | ● | ● | | | ● | | ● | | | | | | | | | | |

# LIST OF THE ABBREVIATIONS

| | | |
|---|---|---|
| HW ..... | : | Hot water. |
| CW ..... | : | Cold water. |
| C ..... | : | Ceramic resistance (normal heating). |
| Ca ..... | : | Ceramic resistance (accelerated heating) |
| TP ..... | : | Immersion heater. |
| 1F ..... | : | With fittings. |
| 2F ..... | : | Without fittings. |
| 3F ..... | : | With fittings and another outlet connection. |
| AMI ..... | : | With mixing valve. |
| SMI ..... | : | Without mixing valve. |
| PUISS ..... | : | Power of th appliance. |
| PN ..... | : | Appliance with normal pression. |
| LP ..... | : | Appliance with low pression. |
| PV ..... | : | Appliance with variable power. |
| PF ..... | : | Appliance with fixed power. |

# IDENTIFICATION PLATE

## SERIAL NUMBER

**10 Characters :** 04 05 125 011

- 011 → Sequencial number
- 125 → Manufacturing day
- 05 → Year of manufacture

**11 Characters :** 1 95 065004 - 31

- 1 → Month of manucfacture : from 1 to 9 → Jan. to Sep., O → Oct., N → Nov., D → Dec.
- 31 → Technical number of the appliance
- 065004 → Sequencial number
- 95 → Year of manufacture

**19 Characters :** 08 05 0013199 900640031

- 08 → Year of manufacture
- 05 → Month of manucfacture
- 900640031 → Product reference
- 0013199 → Sequencial number

**20 Characters :** 3675007 XX 2 07 070 00315

- 3675007 → Product reference
- 2 → Millenium of manufacture
- 00315 → Sequencial number
- 070 → Manufacturing day
- 07 → Year of manufacture

**21 Characters :** 3675007 XX 07 070 0000315

- 3675007 → Product reference
- 07 → Year of manufacture
- 0000315 → Sequencial number
- 070 → Manufacturing day

The indications mentionned on the prices, commercial or technical literature and the scheme are written for your guidance and are available at a given time. The CONSTRUCTOR retains the power to modify the presentation, the form, the size, the conception or the material of the products.